LEPCOS (North-West Laboratory)
http://ferrite.ru Tel/fax +7-812-369-11-54
St-Petesburg, Russia

REVISIONS

REV	SYM	DRAFTER	CHECKER	DATE
3		YAN.TANG	G.F.YANG	04/09/08
4		YAN.TANG	G.F.YANG	05/12/08
5		YAN.TANG	G.F.YANG	06/04/08

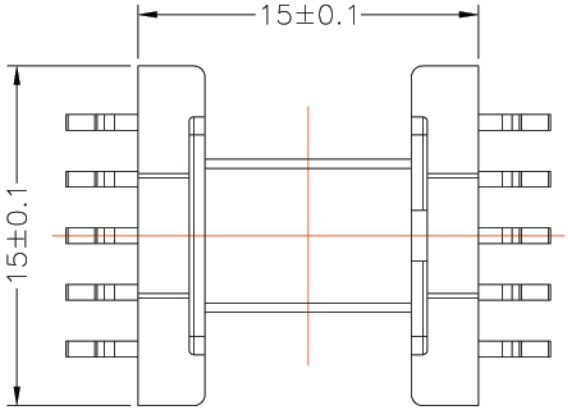

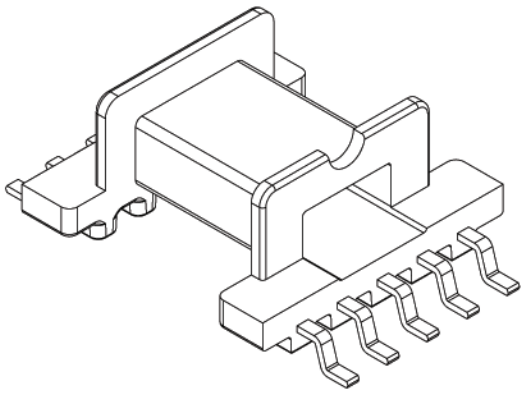

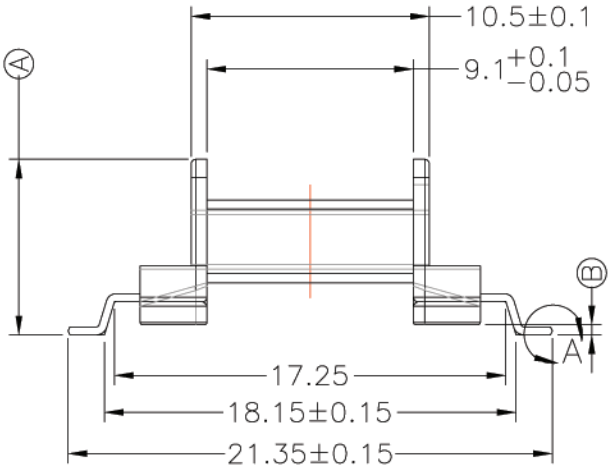

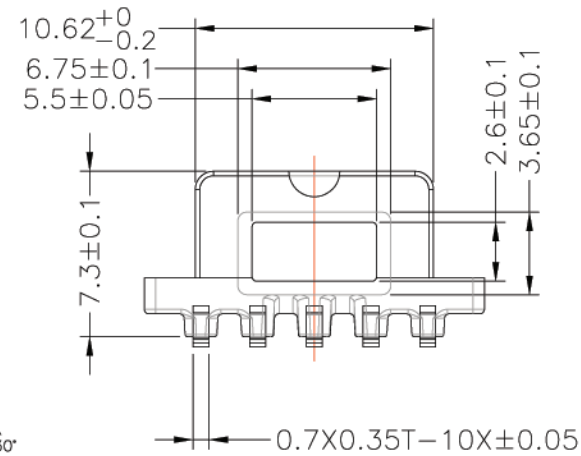

DETAIL:A
PATENTED

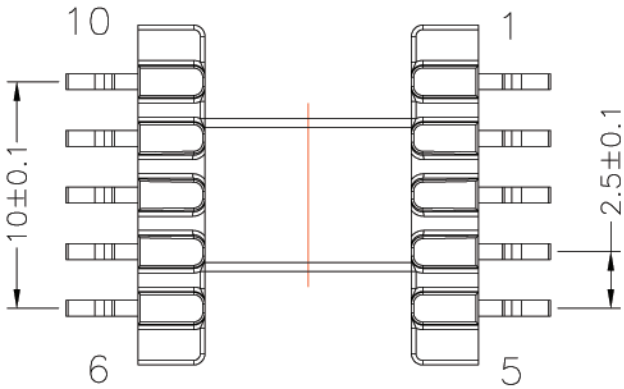

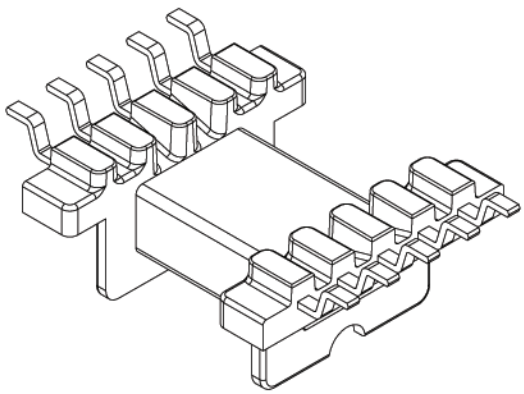

DWG NO.	Bobbin EFD15 1sec 10 pin SMD E-027				
PART NO.	MATERIAL (BOBBIN)	MATERIAL (TERMINAL)	TERMINAL (PLATING)	PIN ALLOCATION	NOTE
E-027	PM-9630	PB	Sn	ALL PIN Ⓐ=7.75±0.15 Ⓑ=0.45±0.1	
					H

TOLERANCE: .X±0.15 .XX±0.10 .XXX±0.05

UNIT : m / m

SCALE 3 : 1

Finish:
1. PB wire Immersion Sn on terminal : Thickness:Sn plating,100,5 μm (200 μ inches) min,Base nickel 0.625 μm (25 μ inches) min.
2. CP wire Immersion Sn on terminal : Thickness:Sn plating,100,5 μm (200 μ inches) min.
3. Coplanarity deviation: 0.10 mm (0.004 inches)max.

REV 5