LEPCOS (North-West Laboratory)

http://ferrite.ru Tel/fax +7-812-369-11-54
St-Petesburg, Russia

REVISIONS				
REV	SYM	DRAFTER	CHECKER	DATE
1		S.Y.TANG	W.H.HSU	08/07/07
2				
3				

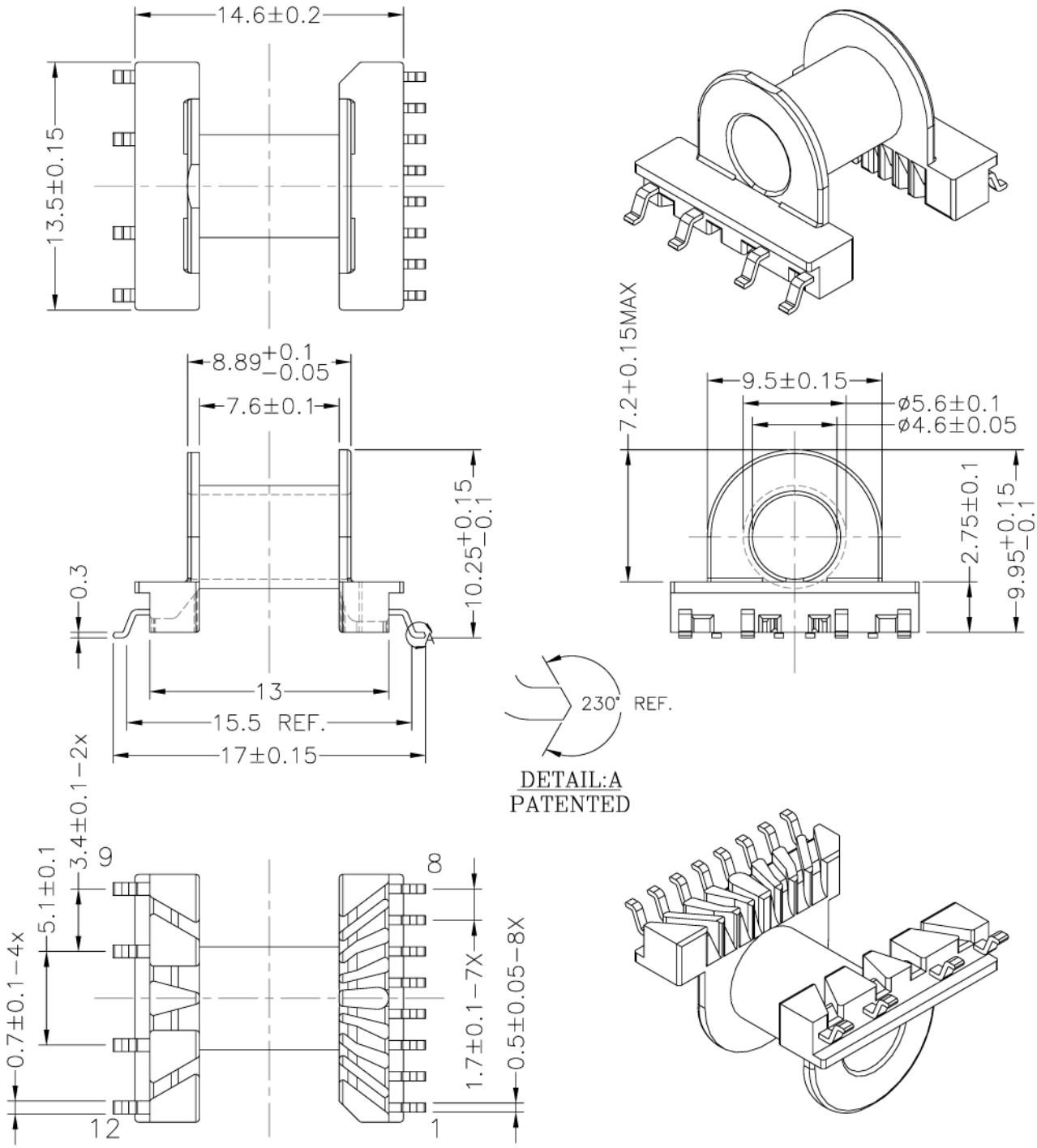

DWG NO.	EP13-12P-GW-1.7-3G-1				
PART NO.	MATERIAL (BOBBIN)	MATERIAL (TERMINAL)	TERMINAL (PLATING)	PIN ALLOCATION	NOTE
TBI-103-03371.103	PM-9630JT	P.B	Sn	ALL PIN	

TOLERANCE: .X±0.15 .XX±0.10 .XXX±0.05

UNIT : m / m

SCALE 3 : 1

Finish:
1. Pb wire Immersion Sn on terminal : Thickness:Sn plating,100,5 μm (200 μ inches) min,Base nickel 0.625 μm (25 μ inches) min.
2. CP wire Immersion Sn on terminal : Thickness:Sn plating,100,5 μm (200 μ inches) min.
3. Coplanarity deviation: 0.10 mm (0.004 inches)max.

REV 1