LEPCOS (North-West Laboratory)

http://ferrite.ru Tel/fax +7-812-369-11-54

REVISIONS				
REV	SYM	DRAFTER	CHECKER	DATE
3		T.S.LII	W.H.HSU	07/22/06
4		T.S.LII	W.H.HSU	04/02/07
5		S.Y.TANG	G.F.YANG	06/20/08

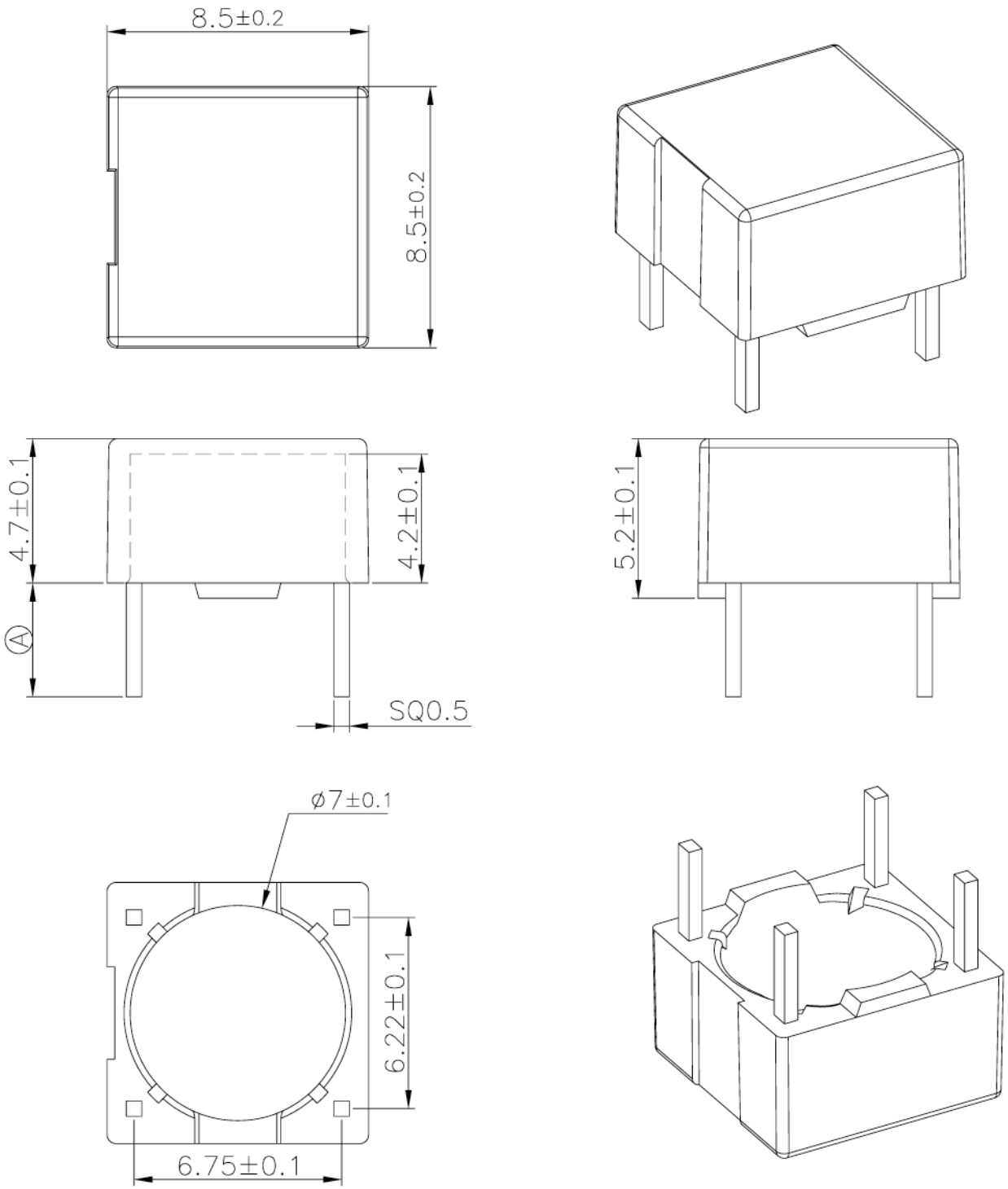

DWG NO.	633T-4P-TH-6.22-A-1				
PART NO.	MATERIAL (BOBBIN)	MATERIAL (TERMINAL)	TERMINAL (PLATING)	PIN ALLOCATION	NOTE
TBI-218-02011.106	PM-9630JT	C.P WIRE	Sn	ALL PIN A=3.2±0.2	
5 TBI-218-02011.116	PM-9630JT	C.P WIRE	Sn	ALL PIN A=3.7±0.3	

TOLERANCE: .X±0.15 .XX±0.10 .XXX±0.05

UNIT : m / m

SCALE 5 : 1

Finish:
1. Pb wire Immersion Sn on terminal : Thickness:Sn plating,100,5 μm (200 μ inches) min,Base nickel 0.625 μm (25 μ inches) min.
2. CP wire Immersion Sn on terminal : Thickness:Sn plating,100,5 μm (200 μ inches) min.
3. Coplanarity deviation: 0.10 mm (0.004 inches)max.

REV 5