LEPCOS (North-West Laboratory)

http://ferrite.ru Tel/fax +7-812-369-11-54

REVISIONS				
REV	SYM	DRAFTER	CHECKER	DATE
1		G.F.YANG	W.H.HSU	07/01/09
2				
3				

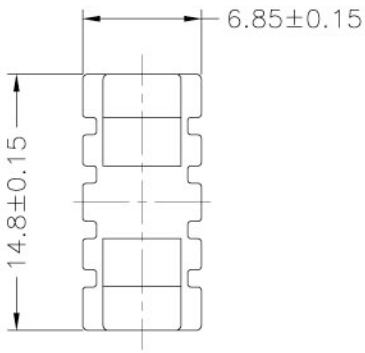

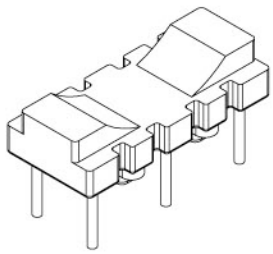

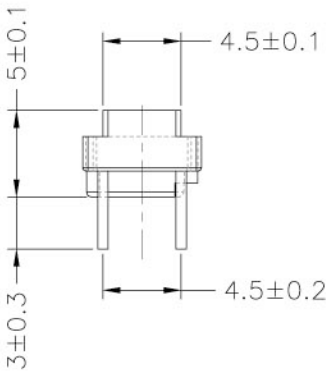

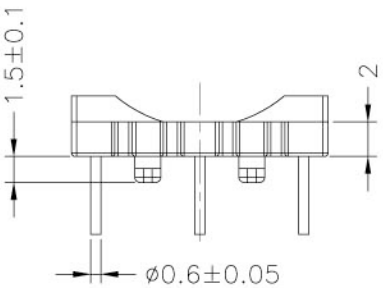

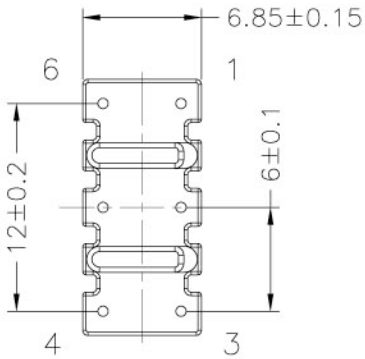

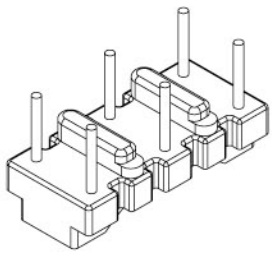

DWG NO.	B15X7-6P-TH-6.0-H-12				
PART NO.	MATERIAL (BOBBIN)	MATERIAL (TERMINAL)	TERMINAL (PLATING)	PIN ALLOCATION	NOTE
TBI-220-01081.1206	PM-9820	CP WIRE	Sn	ALL PIN	
TBI-220-01081.1216	PM-9820	CP WIRE	Sn	CUT PIN#1,3,4,6	

TOLERANCE: .X±0.15 .XX±0.10 .XXX±0.05

UNIT : m / m

SCALE 1 : 1

Finish:
1. PB wire Immersion Sn on terminal : Thickness:Sn plating,100,5 μm (200 μ inches) min,Base nickel 0.625 μm (25 μ inches) min.
2. CP wire Immersion Sn on terminal : Thickness:Sn plating,100,5 μm (200 μ inches) min.
3. Coplanarity deviation: 0.10 mm (0.004 inches)max.

REV 1