LEPCOS (North-West Laboratory)

http://ferrite.ru Tel/fax +7-812-369-11-54

REVISIONS				
REV	SYM	DRAFTER	CHECKER	DATE
2		Y.G.HSU	W.H.HSU	03/17/07
3		YAN.TANG	W.H.HSU	09/22/07
4		YAN.TANG	W.H.HSU	12/24/09

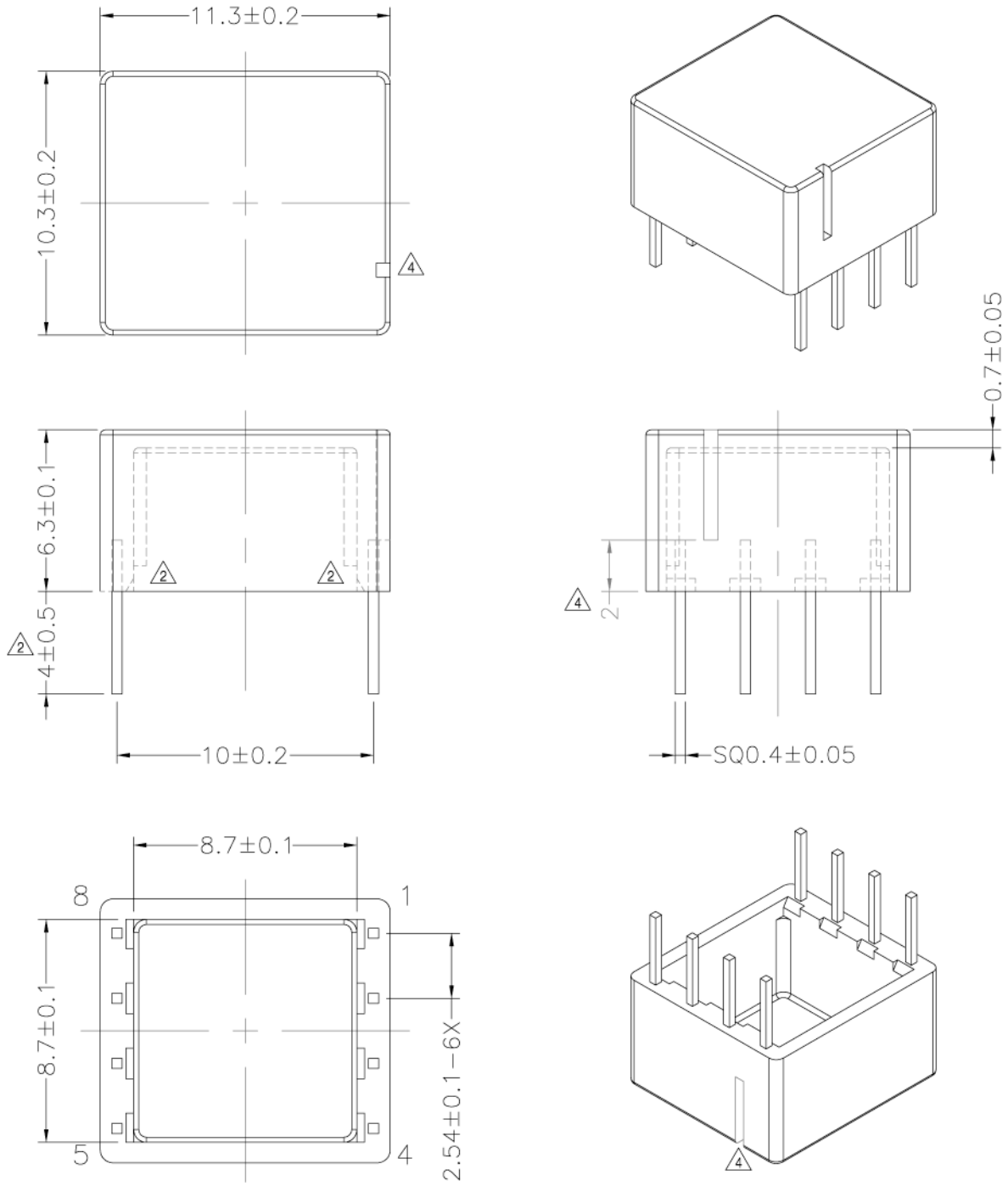

2 NOTE:Pull Strenght 1.0kg (min)

DWG NO.	TR10-8P-TH-2.54-A-1				
PART NO.	MATERIAL (BOBBIN)	MATERIAL (TERMINAL)	TERMINAL (PLATING)	PIN ALLOCATION	NOTE
TBI-218-14011.103	PM-9630	P.B	Sn	ALL PIN	

TOLERANCE: .X±0.15 .XX±0.10 .XXX±0.05

UNIT : m / m

SCALE 4 : 1

Finish:
1. Pb wire Immersion Sn on terminal : Thickness:Sn plating,100,5 μm (200 μ inches) min,Base nickel 0.625 μm (25 μ inches) min.
2. CP wire Immersion Sn on terminal : Thickness:Sn plating,100,5 μm (200 μ inches) min.
3. Coplanarity deviation: 0.10 mm (0.004 inches)max.

REV 4