LEPCOS (North-West Laboratory)
http://ferrite.ru Tel/fax +7-812-369-11-54
St-Petesburg, Russia

REVISIONS

REV	SYM	DRAFTER	CHECKER	DATE
9		T.S.LII	W.H.HSU	06/24/03
10		T.S.LII	W.H.HSU	06/28/03
11		T.S.LII	W.H.HSU	07/21/06

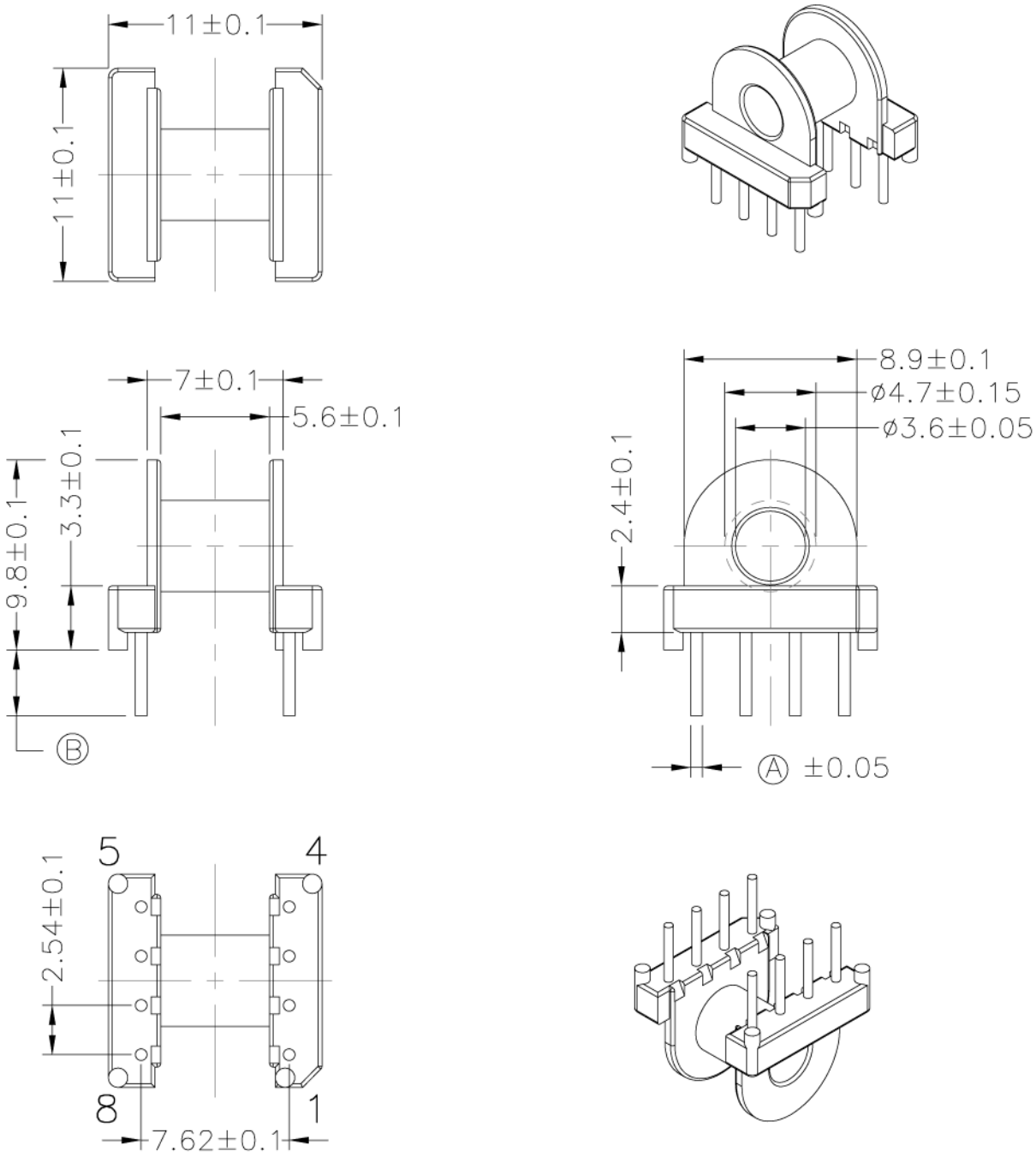

DWG NO.	Bobbin EP10 1sec 8 pin E-038				
PART NO.	MATERIAL (BOBBIN)	MATERIAL (TERMINAL)	TERMINAL (PLATING)	PIN ALLOCATION	NOTE
E-038	PM-9630	CP WIRE	Sn	All Pin Ⓐ= ø0.6 , Ⓑ=3.4±0.3	

TOLERANCE: .X±0.15 .XX±0.10 .XXX±0.05 | UNIT : m / m | SCALE 3 : 1

Finish:
1. Pb wire Immersion Sn on terminal : Thickness:Sn plating,100,5 μm (200 μ inches) min,Base nickel 0.625 μm (25 μ inches) min.
2. CP wire Immersion Sn on terminal : Thickness:Sn plating,100,5 μm (200 μ inches) min.
3. Coplanarity deviation: 0.10 mm (0.004 inches)max.

REV 11