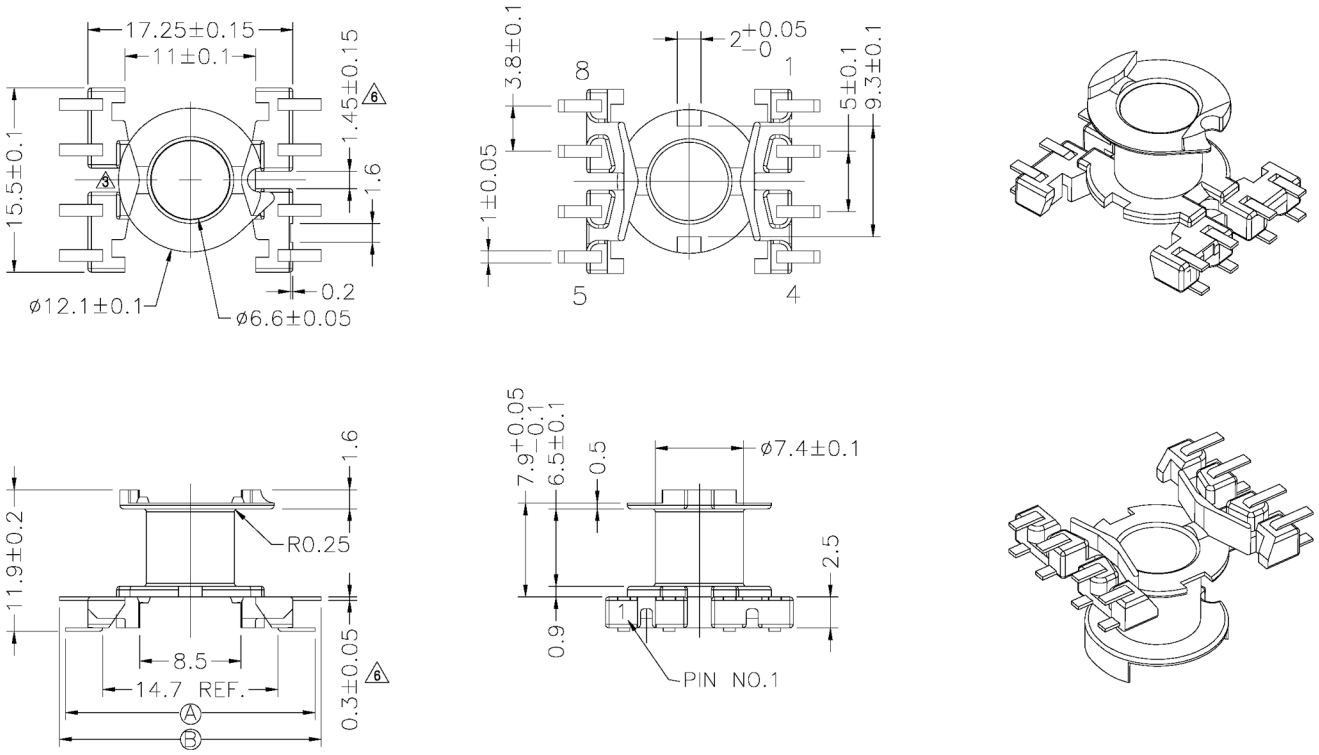

PART NO.	MATERIAL (BOBBIN)	MATERIAL (TERMINAL)	TERMINAL (PLATING)	PIN ALLOCATION
TBI-108-02041.1303	PM-9630JT	P.B C5191 5	Sn	ALL PIN Ⓐ =18±0.5 Ⓑ =21±0.5
TBI-108-02041.1306	PM-9630JT	CP WIRE	Sn	ALL PIN Ⓐ =18±0.5 Ⓑ =21±0.5
TBI-108-02041.1316	PM-9630JT	CP WIRE	Sn	ALL PIN Ⓐ =20.9±0.3 Ⓑ =20.9±0.3

LEPCOS (NWL)
http:\\ferrite.ru

КАРКАС RM6-8P-J-3.8-D-13 (TBI-108-02041.13XX)

МАТЕРИАЛ: PM9630